EVC Network Master Station

Quick Start Guide

The Crisis Network Master Station and Assist Call Master Station is part of the Crisis Network EVC system suitable for medium to large applications up to 512 lines. It is compatible with Crisis range of Type A, Type B, Type C Outstations and the Assist Call range of emergency assistance alarms.

SCAN ME

This guide summarises applicable information from the full manual, which is available from the Eurofyre website by scanning this QR code. The Installation Guide and the User Guide are contained on the micro SD card that is fitted to the rear of the Master Station display PCB.

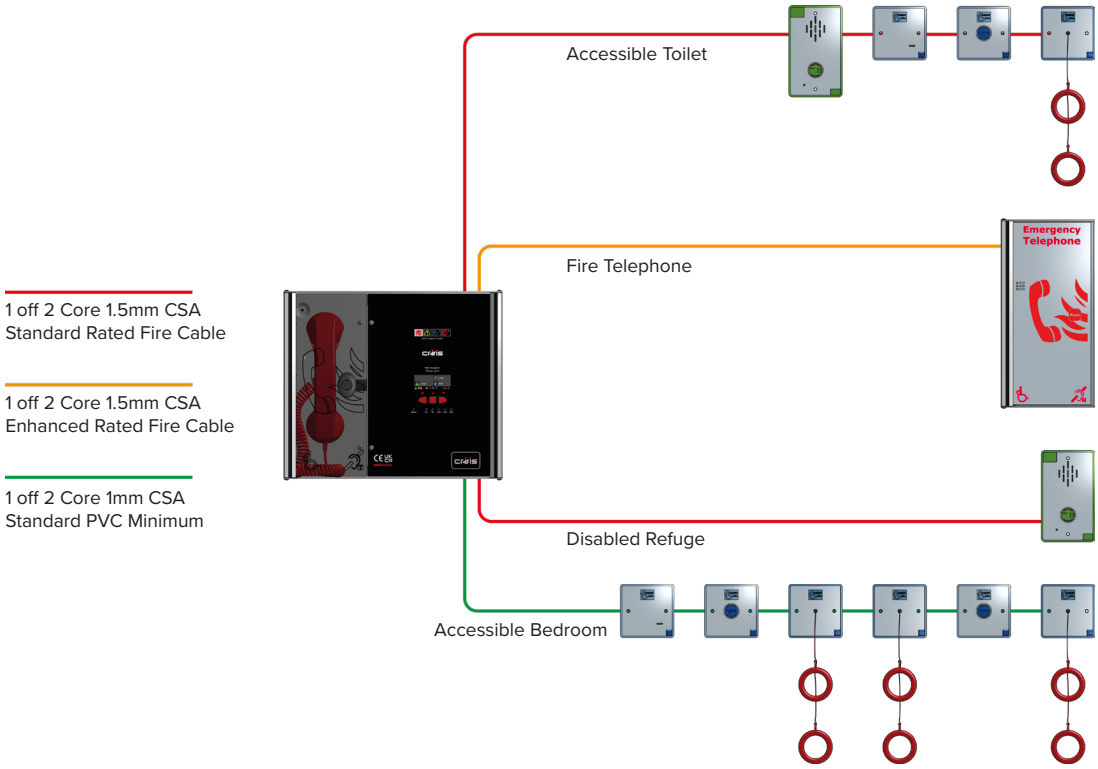

Figure 1: Typical Wiring Diagram - Crisis EVC Network Master Station

1 Important Safety Information

This Equipment must only be installed and maintained by a suitably skilled and competent person.

This Equipment is defined as Class 1 in EN60065 (Low Voltage Directive) and must be EARTHED.

⚠	Caution: Indoor Use Only Warning: Shock Hazard - Isolate Before Opening Warning: TO REDUCE THE RISK OF FIRE OR ELECTRIC SHOCK, DO NOT EXPOSE THIS UNIT TO RAIN OR MOISTURE Warning: THIS UNIT MUST BE EARTHED Warning: NO USER SERVICEABLE PARTS

Each Crisis EVC Network Master Station, Crisis EVC Network Expander and Crisis EVC Master Station requires local isolation with verification as per the Electricity at Work Regulations 1989, returning to a B6A breaker clearly marked "**EMERGENCY VOICE COMMUNICATION SYSTEM. DO NOT TURN OFF**".

Anti-static handling guidelines

Make sure that electrostatic handling precautions are taken immediately before handling PCBs and other static sensitive components.

Before handling any static-sensitive items, operators should get rid of any electrostatic charge by touching a sound safety earth. Always handle PCBs by their sides and avoid touching any components.

2 Battery Information

In the event of mains failure, BS5839 Part 9:2021 requires battery backup for 24 hours standby and 3 hours operation thereafter.

A Crisis EVC Network Master Station requires **one number** 12V 7ah vent regulated sealed lead acid battery. The battery is not supplied with the Crisis EVC Network Master Station.

⚠	**Safety Information:** Sealed Lead Acid batteries contain sulphuric acid which can cause burns if exposed to the skin. The low internal resistance of these batteries mean large currents will flow if they are accidentally short-circuited causing burns and a risk of fire. *Exercise caution when handling batteries.* **Power Up Procedure:** Always apply mains power before connecting batteries. When connecting batteries, always connect the Positive (Red +) terminal first. **Power Down Procedure** Disconnect the batteries before removing the mains power. When disconnecting batteries, always remove the Negative (Black –) terminal first.

3 Mounting Information

Master Stations should be mounted in fire control rooms or next to the fire alarm panel at a mounting height of between 1.4m and 1.5m above finished floor level to the centre of the controls. Type A outstations (fire telephone) are generally fitted in fire-fighting lobbies and fire and rescues access points at 1.3m to 1.4m above (FFL). Type B outstations are used in disabled refuges at a mounting height of 0.9m to 1.2m (FFL). For Emergency Assistance alarms see Crisis Assist Call datasheet.

Use the 2.5mm AF Hex Key supplied to open the right-hand front cover. Use suitable fixings to mount the back box, there is no need to remove any PCBs or brackets to enable fixing of the enclosure.

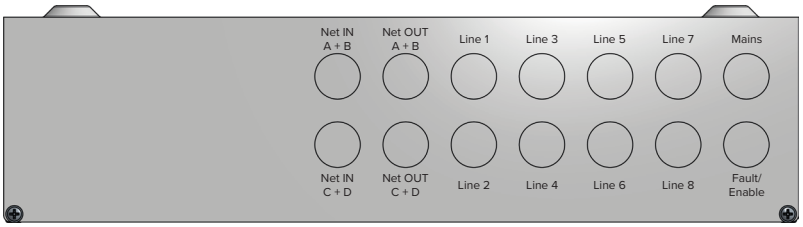

Figure 2: Crisis EVC Network Master Station Top Entries

Unused knockouts must be left unopened to comply with the Low Voltage Directive. Accidentally knocked out holes should be blanked off.

The Crisis EVC Network Master Station weighs 6kg with batteries, so care should be taken to securely mount the Station on stud walling.

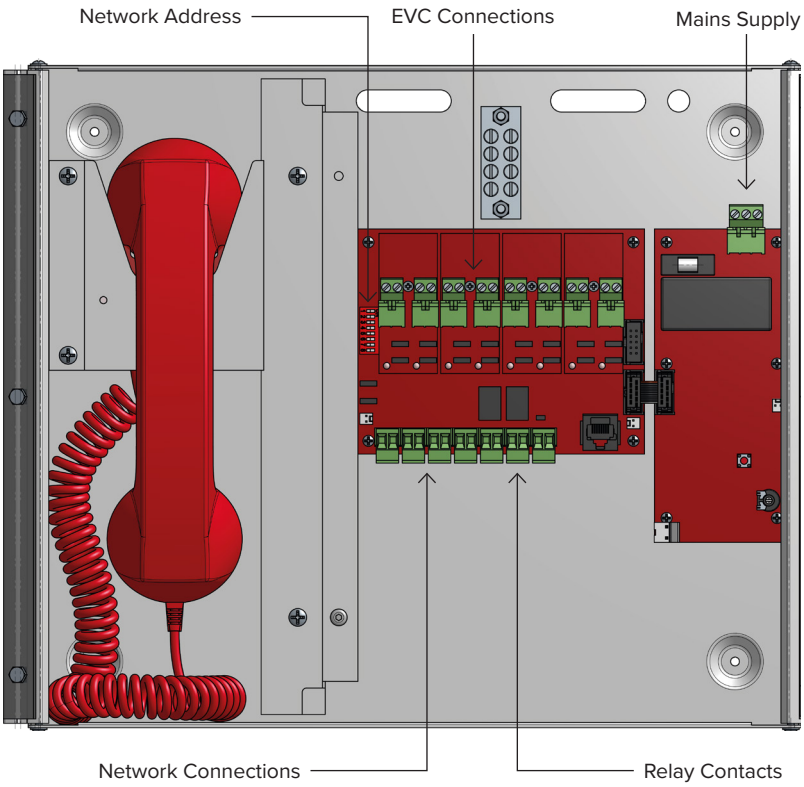

Figure 3: Crisis EVC Network Master Station Internals

4 Wiring

4.1 Cable Information

Fire telephone systems utilise Type A outstations and must use enhanced grade fire resistant cabling throughout for all wiring, including the mains supply to the master station. Maximum distance using 1mm or 1.5mm cable is 500m from outstation to master station.

Disabled Refuge systems utilise Type B outstations, they are wired in standard or enhanced grade fire resistant cabling Refer to BS 5839-9:2021 for full details.

Max distance using 1mm or 1.5mm cable is 500m from outstation to master station.

Emergency assistance alarms (Assist Call) for dedicated circuits use 1mm 2 core flex for lengths of 500m from the master or security cable for shorter lengths from up to 50m for 2 cores up to 200m if 4 cores are twisted together. If sharing with a Type B use the same grade of fire-resistant cable.

4.2 Network Wiring

The network is dual redundant fault tolerant with short circuit isolation included within all compatible panels, It is important to wire the network as a ring, cabling must be 2×2 core loops (Audio 2c, Data 2c) therefore there will be 4×network cables at each panel.

4.3 Network Address

The Network Master Station factory default network address is 1, network address 2 is the default address for a system Expander panel. When additional panels are added to the network, the next address will be address 3. It is not essential that network addresses run sequentially, and a gap can be left in the address sequence, however this is less desirable and makes fault finding more difficult.

This address is set by the dipswitches on the Exchange PCB as shown in Figure 3. The address is a binary number given by the positions of dip switches 1 to 6, with valid addresses lying between 1 and 64 inclusive. A full address list is available in the full manual.

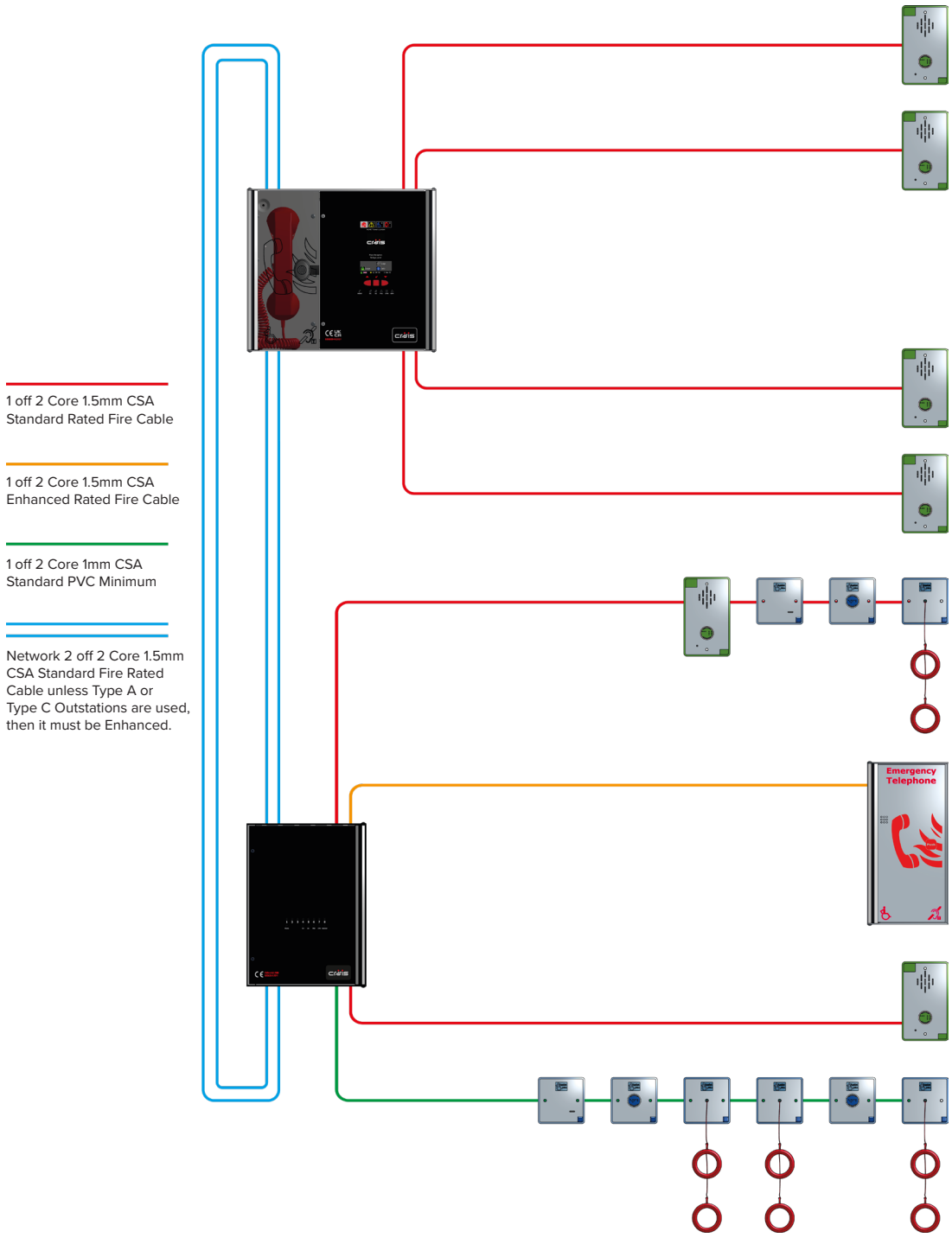

Figure 4: Typical Ring/Network Wiring Diagram - Crisis EVC Network Master Station & Expander

5 Commissioning

The commissioning should be carried out by a competent person who has a basic knowledge and understanding of the design and installation sections of BS5839-9:2021, and has access to the specification of the project.

5.1 Cable Checks

- The 500V insulation tests should have been carried out by the installer and the results made available to the commissioning engineer.
- All cables should be correctly labelled.
- Test field wiring and check for end-of-line 10kΩ resistor on all line circuits. Check cables are clear from any short or open circuits.
- Connect outstation cables into Line Cards ensuring the Earth is sleeved and terminated into the Earth block.

5.2 Network Setup

- Configure relevant dipswitches for the network settings that may be required as per the set-up section in this manual.
- Connect the network cabling (if appropriate), ensuring Net OUT ABCD is correctly connected to Net IN ABCD and the ring is continuous.
- Only Connect the Earth screen of the Net IN cables.

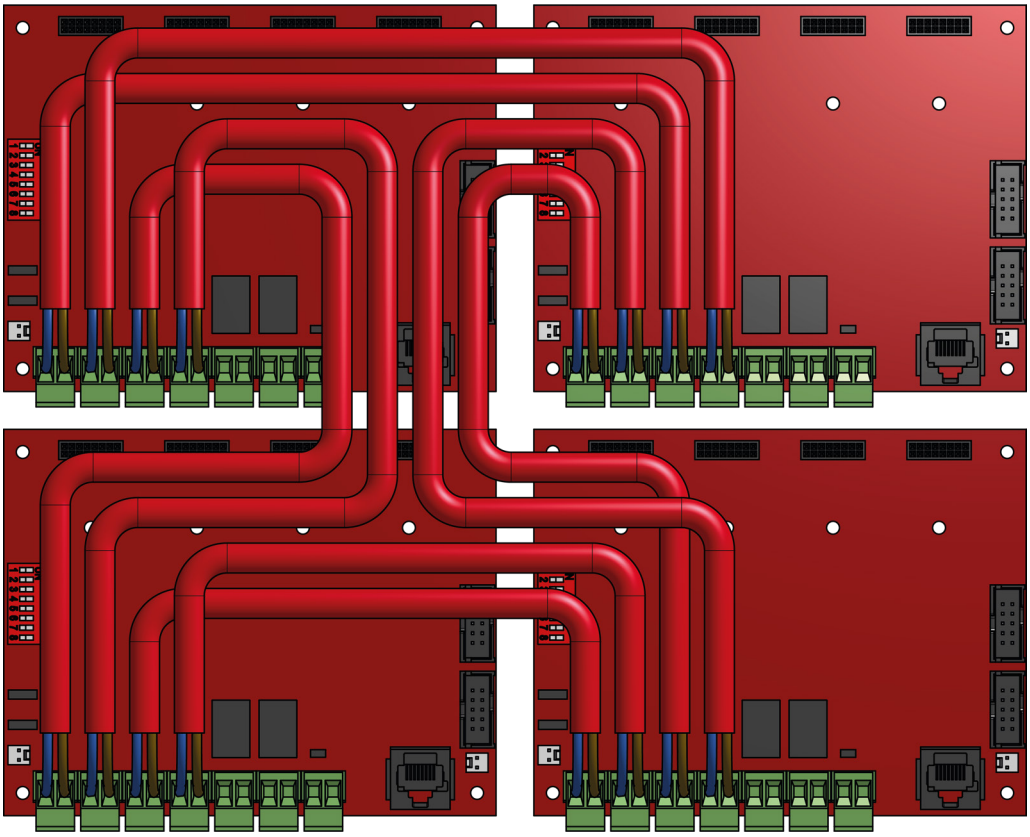

Figure 5: Typical Network Connection Diagram - Crisis EVC Network Master Station

5.3 Power Up

Power up the Network Master Station using mains only, fed via a double pole isolator local to the panel fed from a dedicated circuit. The AC power indicator will be illuminated, and the DC power indicator is extinguished. The PSU fault and General fault indicators will be illuminated. There should be no line fault indicators illuminated.

If there are no line faults present, the battery may be connected. The DC power indicator will be illuminated, and the PSU fault and General fault indicators are extinguished when battery is connected.

If there are any line fault indicators illuminated, then the field wiring should be checked prior to the battery being connected.

Repeat the power up section for any additional Expander panels or additional Network panels.

5.4 Site Configuration

Upload the site configuration from the Micro SD card (recommended) see section 7 in the Installation Guide available to download at www.eurofyre.co.uk or using the settings menus see section 8 of same manual.

As mentioned previously the default configuration is for 1 x Network Master Station and 1 x Expander, set up with 8 lines on each. If device missing or network faults are reported address these before continuing. Once remedied re-upload the site configuration to ensure all panels are programmed

5.5 Site Testing

Lift the master handset receiver and listen for a cadence tone.

All outstations may be tested now, visit each outstation in turn and test that it is connected to the correct Master Station or Expander panel and perform an intelligibility test. This test should be conducted when the building has normal background noise levels. The intelligibility test requires two personnel.

Where Assist Call is fitted, all pull cords in each circuit should be tested, acknowledged at the panel, cancelled at the call location and the panel text checked. Ensure all controls and indicators operate correctly.

When all outstation tests are complete, network cable checks should be performed to ascertain correct operation by unplugging network cable to ensure the network is correctly fault monitoring and continues to work with a single cable fault.

When complete the log may be retrieved from Micro SD card, saved as a spreadsheet, and kept for record purposes.

6 Settings Menu

For a full description of the menus and features of the Network Master Station, then the full Installation Guide should be consulted.

Figure 6: Level 3 Menu Screen

All menus are accessed from the home screen as shown in Figure 7. The screen shown has already been accessed from the engineer code (1812).

By pressing the settings button the settings menu as shown in Figure 8 will be accessed.

As can be seen there are many other menus shown, such as:

	Clock	Allows the user to edit the time and date settings that are used across the network.
	Test	Allows the user to perform a lamp test on the panel.
	Load	Allows the user to load the configuration from the Micro SD card.
	Backup	Allows the user to back up the configuration to the Micro SD card.
	Settings	Allows the user to access the settings menu to configure the system.

Table 1: Level 3 Buttons

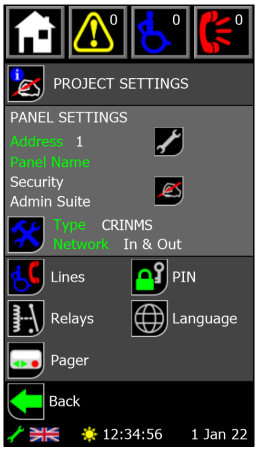

Figure 7: Settings Screen

The additional engineering menus are shown on this screen, a summary of the panel settings is displayed. By pressing the button other panels on the network can be navigated to, which gives access to their network and line settings.

	Lines	Allows the user to edit the line settings on the network.
	PIN	Allows the user to change the passcodes for both access levels on the Crisis EVC Network Master Station.
	Relays	Allows the user to configure the in-use relay on the local exchange board.
	Language	Allows the user to change the language of the Crisis EVC Network Master Station panel.
	Pager	Allows the user to configure the pager. Only shown if the daughterboard is attached.

Table 2: Setting Screen Buttons

Figure 8: Panel Settings Screen

The panel settings screen is shown by pressing the icon on the settings screen.

At the top of the screen is the address and name of the panel that is being configured. This panel can be changed by pressing the and icons. The panel type button selects which type of panel is situated at the given panel address, highlighting in green denotes panel selection.

Network monitoring is achieved by use of the toggles which indicate if each port is monitored To meet BS 5839-9:2021, by net in and net out should be monitored, as the network is wired in a ring.

Once configuration is changed, the save button is shown. Pressing it will update the configuration for that panel. Each panel must be saved separately.

Pressing the back button returns to Figure 7 without saving new configuration.

Figure 9: Line Settings Screen

The line settings screen is shown by pressing the  icon on the settings screen and allows the user to see the monitoring for each line, and change any of the text associated with the line.

At the top of the screen is the address and name of the panel that is being configured. This panel can be changed by pressing the  and  icons.

A line is selected using the number buttons, with  indicating which line is the currently selected one.

Underneath the line select is the monitoring state of the selected line. The states that are possible are:

No	No device is being monitored for.
EVCS	Type A, Type B or Type C outstation attached.
Alarm	Emergency assistance alarm attached.
Yes	Both outstation and assistance alarm attached.
Switch	Event mode switch input attached to line.

Table 3: Line Screen Configuration

Pressing the  icon will bring up the line monitoring screen and allow the user to configure the monitoring of a given line, along with the call and alarm icons, and the day and night settings.

The call name, alarm name, and fault name for the given line are all shown and can be edited by pressing the  icon next to the desired text. All these pieces of text are two lines of 20 characters.

Pressing the back button  returns to Figure 7 without saving new configuration.

7 Operational Flowcharts

7.1 Home/Menu Structure

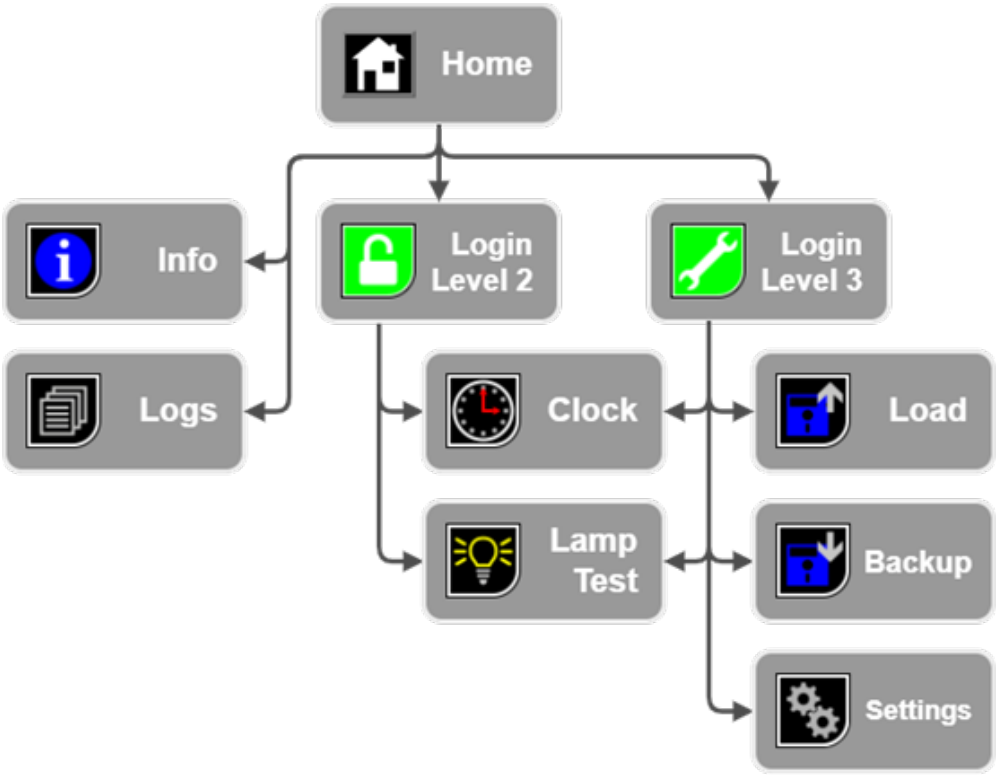

Figure 10: Home/Menu Structure

12.2 Settings Structure

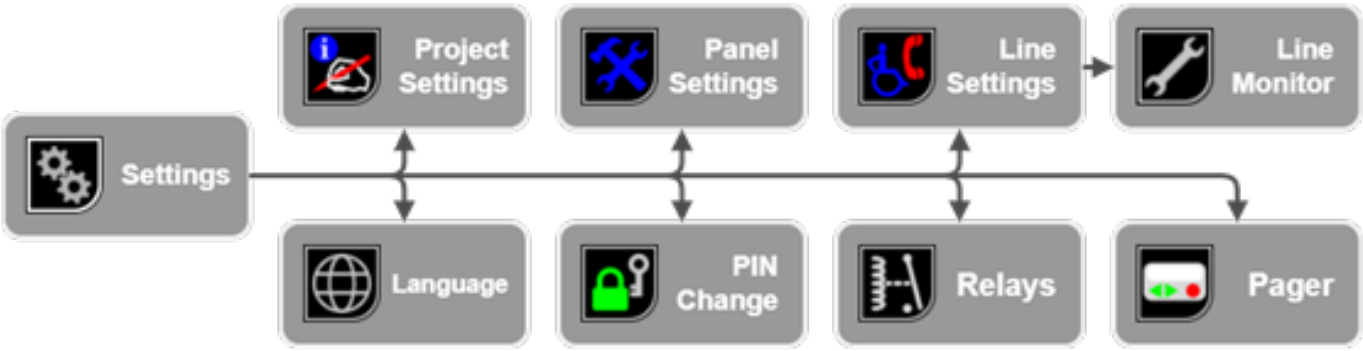

Figure 11: Settings Structure

8 What's Included

Remove the Crisis EVC Network Master Station from its packing, and check the contents against the following list:

- Crisis EVC Network Master Station
- Quickstart Guide
- Accessory Pack:
  - 1 x 2.5mm AF Hex Key
  - 1 x Battery Lead
  - 1 x Door Handle/Key
  - 10k End of Line (EOL) Resistors, 2 per Line Card
  - Micro USB SD Card Reader

Micro SD card is fitted to the rear of the display PCB, this is preloaded with factory default configuration as previously described.

The Crisis Network EVC system is designed and manufactured in the UK.

Eurofyre Limited, Unit C1 Knowle Village Business Park, Mayles Lane, Wickham, Hampshire, PO17 5DY, UK

www.eurofyre.co.uk